TAKAHA

SLIM LOCK (with unlock lever) NL0210

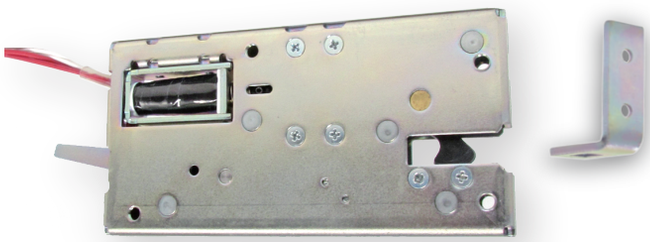

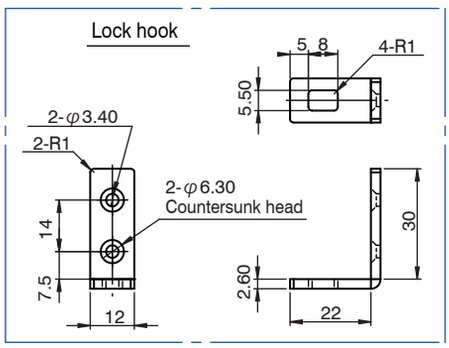

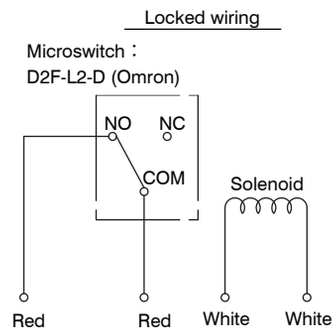

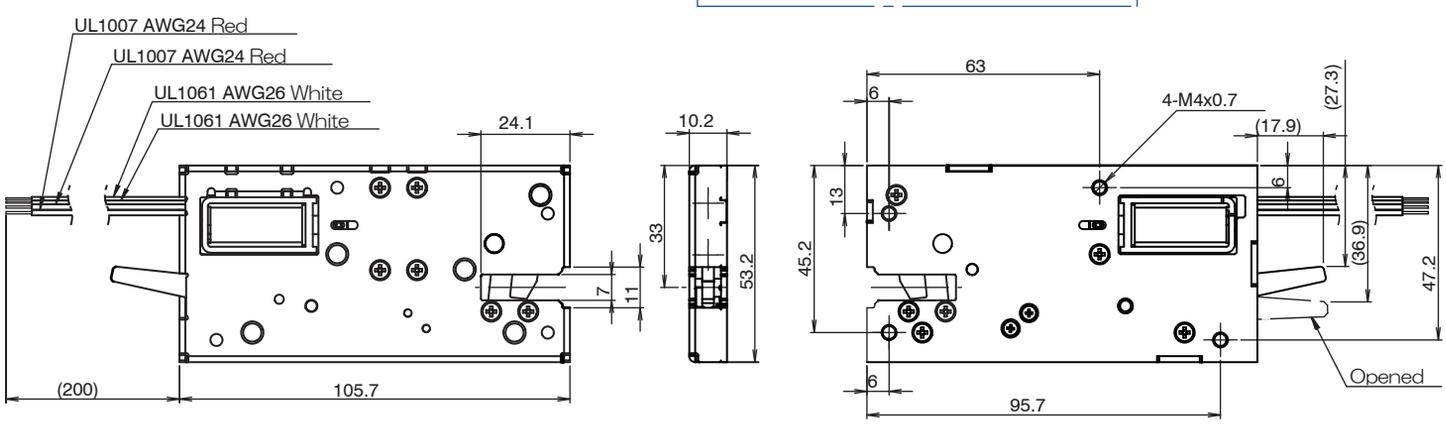

Rated specification (Ambient temperature 20℃)

Part Number	Coil resistance	Voltae	Current	Power consumption	Duty Cycle
NL02101 (tape color: black)	18Ω	DC24V	1330mA	32W	6%
NL02102 (tape color: yellow)	4.5Ω	DC12V	2666mA	32W	6%
		DC6V	1333mA	8W	25%

Operating characteristics (Ambient temperature 20℃)

Part number	Operating voltage	Unlockable load weight
NL02104	DC10.8V	9.80N / DC24V applied
NL02105	DC5.4V	9.80N / DC12V applied

Use: Parcel locker, strage locker, display, small box locking
Lock: Close the door
Open: When the solenoid is energized, the lock is released and the door is pushed out by the spring force
Accessory: Lock hook
Ambient temperature: -5℃ ～ 40℃ (No freezing)
Ambient humidity: 45% ～ 85% (No condensation)

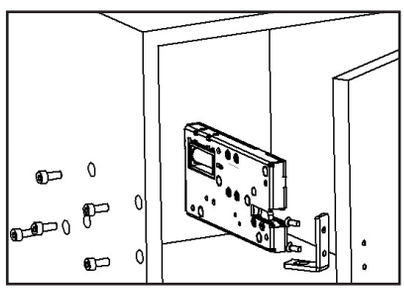

Attachiment example